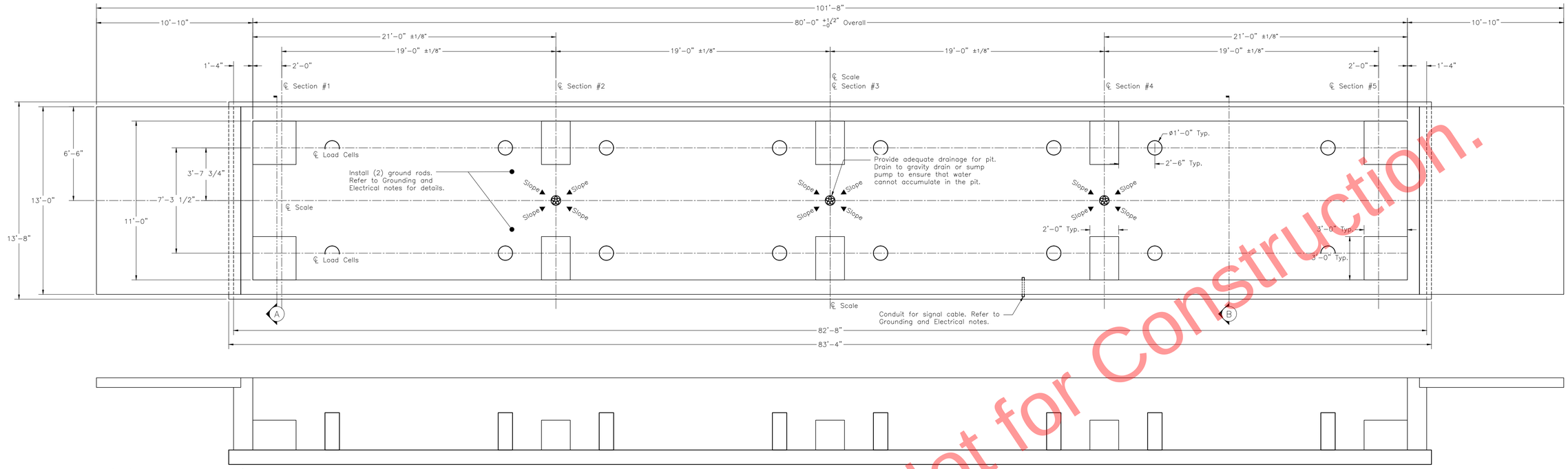

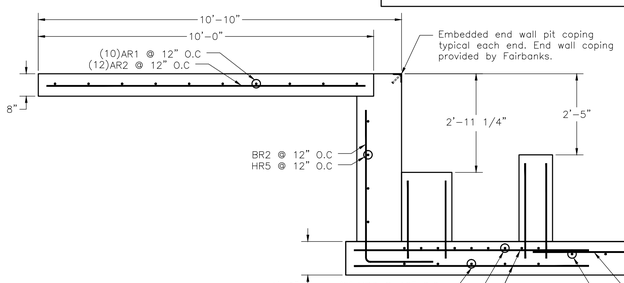

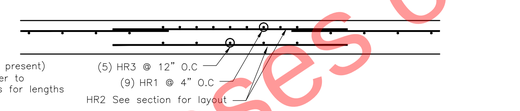

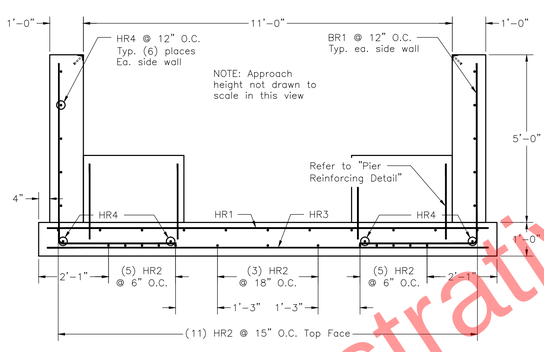

SECTION A–A

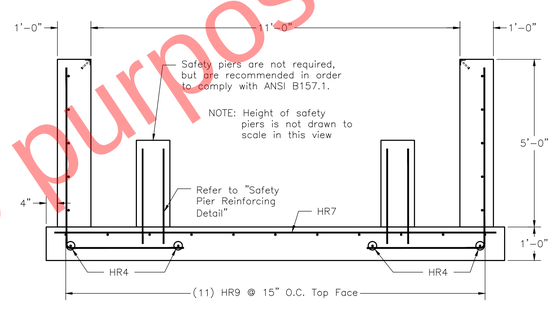

SECTION B–B

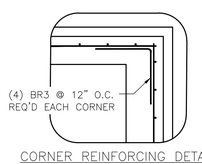

CORNER REINFORCING DETAIL

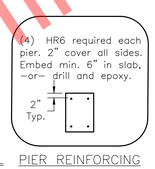

PIER REINFORCING
Top View

SAFETY PIER REINFORCING
Top View

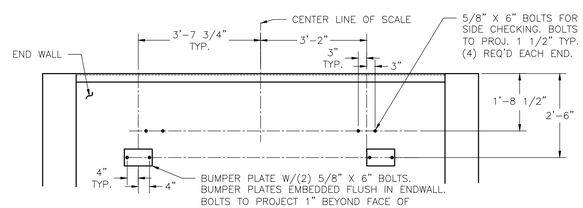

END WALL CHECKING DETAIL

FOUNDATION REINFORCING SCHEDULE
ASTM 615 – GRADE 60

MARK	QTY	SIZE	LENGTH	BENDING	WEIGHT (LBS)
BR1	164	#4	9' –0"	5'–6" |3'–6"	986
BR2	26	#6	6' –10"	4'–10" |2'–0"	267
BR3	16	#4	4' –0"	2'–0" |2'–0"	43
HR1	45	#6	13' –2"	13' –2"	890
HR2	115	#4	7' –0"	7' –0"	538
HR3	25	#4	13' –2"	13' –2"	220
HR4*	70	#4	17' –11"	17' –11"	838
HR5	8	#4	12' –6"	12' –6"	67
HR6	40	#4	2' –3"	2' –3"	60
HR7	64	#4	2' –10"	2' –10"	121
*Splice (5) HR4 to make 82'–10" in slab, 82'–2" in side walls.					
MIDSPAN REBAR BETWEEN LOAD CELL SECTION					
MR1	64	#4	13' –2"	13' –2"	563
MR2	44	#4	15' –3"	15' –3"	448
WWR 6x6 D10.0/D10.0 (Grade 60) can be used in place of midspan rebar. Approximately 805sq. ft. required.					
APPROACH REBAR					
AR1	20	4	12' –6"	12' –6"	167
AR2	26	4	9' –6"	9' –6"	165
Total Weight					5373

FOUNDATION CONCRETE
3500 PSI MINIMUM

LOCATION	QTY (CU. YDS)
SLAB	42.25
WALLS	36.25
PIERS	5.50
SAFETY PIERS	1.25
APPROACHES	6.50
TOTAL CONCRETE	91.50
MINIMUM EXCAVTION	393.50
CLEARANCE DIMENSION	33"

GENERAL NOTES

1. Excavation, foundation forms, rebar, and concrete to be furnished by contractor or customer.
2. Foundation shown is designed for soils with a minimum bearing capacity of 1500 psf and adequate drainage. if soil conditions do not meet these requirements, adjust foundation or soil as required. The design is adequate for a highway surcharge of 300psf.
3. Work from centerlines when erecting forms and placing embedded items. Place anchor bolts within ±1/8" of positions indicated in drawing.
4. In areas of the country where there is severe freezing, increase the depth of the foundation so that the bottom extends below the frost line, or provide a minimum of 12" free draining granular material to prevent frost heave.
5. N.I.S.T. H–44 requires that on the entrance and exit ends of a vehicle scale, there shall be a straight approach that is:
   5.1. At least the width of the platform.
   5.2. The length of at least one–half the length of the platform but not required to be more than 40ft, and
   5.3. Any slope in the remaining portion of the approach shall ensure ease of vehicle access, ease for testing purposes, and drainage away from the scale.
6. N.I.S.T. H–44 requirements and local weights and measures regulations may require installation parameters somewhat different than illustrated on this plan, particularly in regard to pit depth and approaches. In order to insure compliance, consult the local Fairbanks service office prior to installation.
7. Refer to manual for all installation and operation instructions.
8. Fairbanks does not recommend using foundation or ground installed guide rails along the sides of the truck scale platform. Damage may occur to the scale if the vehicle hits the guide rail, transferring damaging forces to the platform and the checking system. usage of this style guide rail will void the product warranty. If guide rails are necessary, please use fairbanks accessory rub rails.
9. A minimum of 24" of clearance is required on both sides of the scale in order to access load cells, electronics, and checking hardware.

CONCRETE AND REINFORCING STEEL NOTES

1. All concrete material and workmanship to be in accordance with the current American Concrete Institute (ACI) code requirements.
2. All concrete to be a minimum of 3000psi at 28 days.
3. Reinforcing steel are to be ASTM 615, Grade 60 or equal. Bend bars cold to conform with required details. Rebar shall be free of all mud, debris, cement grout, loose rust, grease and oil that would impair bonding. Space bars properly and tie securely in position before pouring concrete. Tack welding of bars is prohibited
4. Rebar cover:
   4.1. Concrete cast against earth: 3"
   4.2. Formed concrete exposed to earth or weather: 2"
   4.3. Cover at termination end of rebar: 3"
5. The top of all load bearing piers must be smooth, flat, level, and in plane with one another in order for load cell plates to bear properly. Vertical rebar for piers may be optionallly drilled–and–epoxied in place. Some states require that concrete piers be poured monolithic with the side walls (recommended method).

GROUNDING AND ELECTRICAL NOTES:

1. Install (2) 3/4" x 8'–0" long ground rods to project 4" Tie ground rods to slab rebar. Two ground rods are supplied with scale:
   1.1. One for grounding Intalogix Power Supply. Position the ground rod to match the chosen location for the PPS. The PPS may be located at any section.
   1.2. One for grounding scale weighbridge. Place within 3ft of a main beam, at any convenient location. The power supply ground must be separate from weighbridge ground, and should be at least 4'–0" from power supply ground.
2. Install minimum 1 1/2" conduit for cable from junction box to scalehouse. Suitable conduit for low voltage conductor shielded cable must pass through the wall at any point above pier tops that is convenient. Conduit to extend a minimum of 2" beyond the surface. Conduit is not supplied from the factory.
3. If alternating current (AC) is required near the scale, it shall not run closer than 36" in parallel with any load cell or other signal carrying cable.

THE INFORMATION CONTAINED IN THIS DRAWING OR PRINTING DOCUMENTS IS THE PRIVILEGED AND CONFIDENTIAL PROPERTY OF FAIRBANKS SCALES. DO NOT USE, COPY, REPRODUCE OR DISCLOSE WITHOUT WRITTEN PERMISSION. FAIRBANKS SCALES ASSUMES NO RESPONSIBILITY FOR ALTERATIONS TO THIS DOCUMENT AFTER ORIGINAL TRANSMISSION.

UNLESS OTHERWISE SPECIFIED, DIMENSIONS IN INCHES. TOLERANCES ARE AS FOLLOWS: FRACTIONS ±1/8" ANGLES ±1° 3–PLACE DECIMAL ±0.005 2–PLACE DECIMAL ±0.05 HOLE DIAMETERS ±1/32"

THIRD ANGLE

80' x 11'
Tundra XLT Field Pour
100,000lb CLC, 135ton Capacity

MODEL: PLT–2600–100–B11–080

FAIRBANKS SCALES
AMERIFAX, INC.
AMERIGAN, ARE

SCALE: NTS | DRAWN: JH | CHECKED: | APPROVED:
SHEET: 1 OF 1 | DATE: 2/2/16
DRAWING NUMBER: D–B176180–BP60 | REV: –

Illustrative purposes only. Not for Construction.